1520 N. 17TH ST.

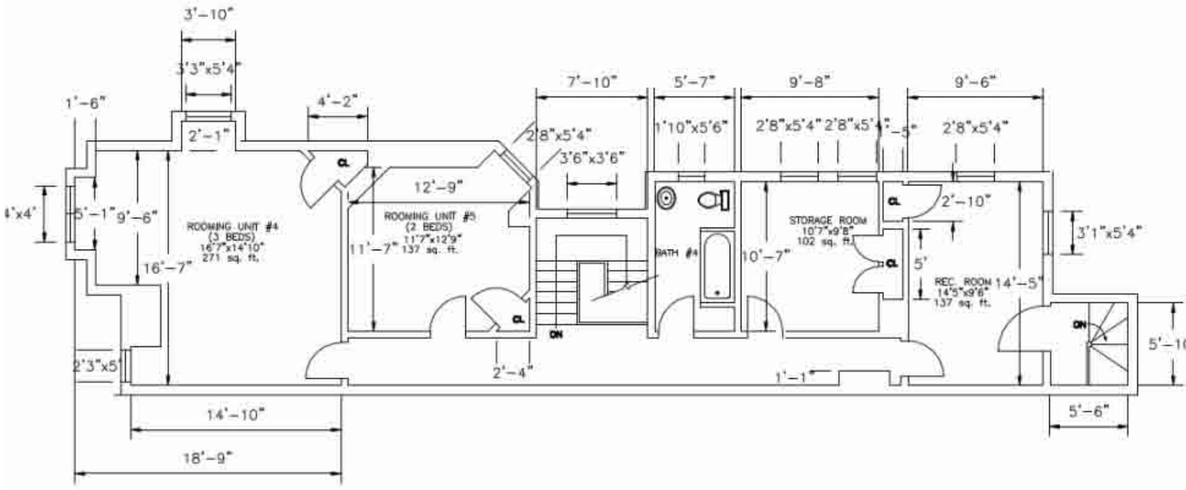

Third Floor
Scale: 3/32" = 1'-0"

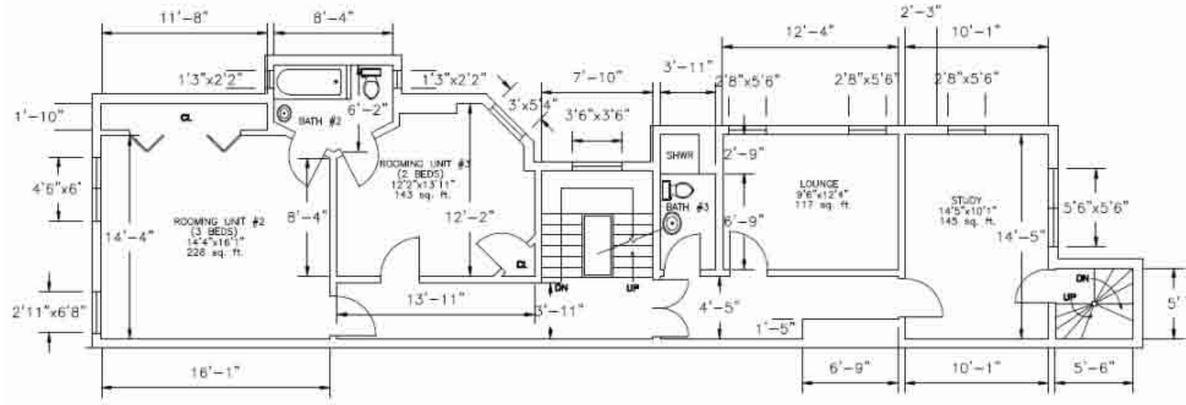

Second Floor
Scale: 3/32" = 1'-0"

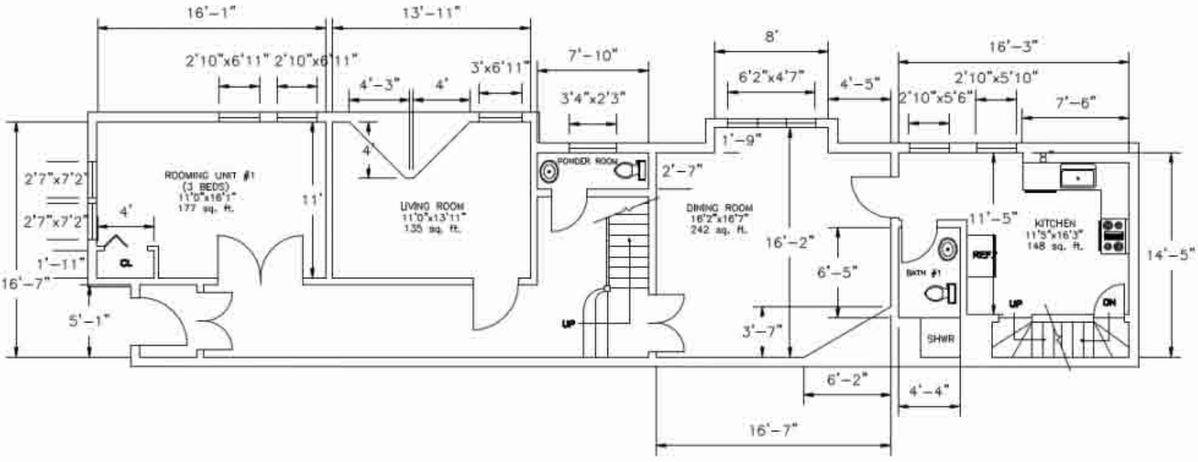

First Floor
Scale: 3/32" = 1'-0"

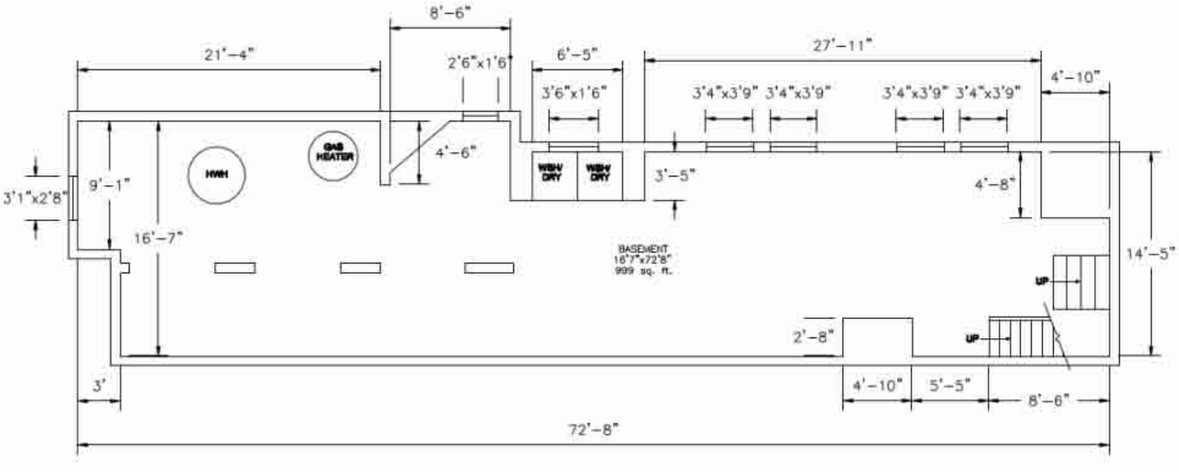

Basement
Scale: 3/32" = 1'-0"